DEREIKE

DEREIKE Side Channel Blower

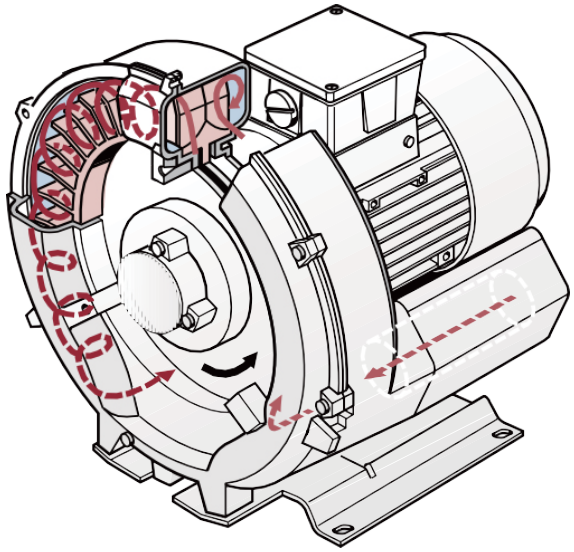

Side Channel Blower Instruction Manual

https://www.dereike.com

CE

1. Operating Principle---------- 1
2. Installation Condition---------- 2
3. Applications---------- 2
4. Installation Notes ---------- 3
5. Pipe Installation ---------- 3
6. Accessories Optional Selection---------- 4
7. Electric connections ---------- 4
8. Other Notes---------- 5
9. Repair & Maintenance ---------- 6
10. Troubleshooting---------- 7
11. After-sales service & Warranty---------- 7

Thank you for choosing the DEREIKE side channel blower!

In order to ensure the normal operation and service life of the blower, to ensure your safe and continuous production, Please read this instruction manual before installing, using and debugging the product. And if you have any quality or technical problems after using this product, please contact us in time, we will offer you professional and high-efficiency service.

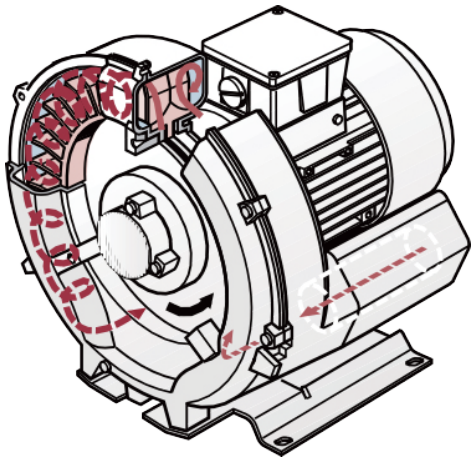

Operating Principle

The DEREIKE side channel blower is a gas chamber formed by the impeller and the casing (compressed air chamber) from the inlet to the outlet, and the impeller of the blower is directly driven by the motor, and the airflow is in the chamber. It is compressed to generate a swirling airflow, and the gas continuously accelerated and forms a spiral cyclone in the direction in which the impeller rotates, thereby generating a large pressure difference. Since the bearing of the pump body is installed outside the compression chamber, the reliability of operation and the cleanliness of the air can be ensured even when the maximum differential pressure is applied.

The gas is sucked in from blower inlet, the rotating impeller gives the gas a speed in the direction of rotation of the impeller, and the centrifugal force on the vane causes the gas to accelerate outward and the pressure increases. As the rotation progresses, the gas pressure is increased. As the side channels narrow at the air outlet, the gas is forced out of the compression chamber and discharged through the outlet muffler.

Installation Condition

Notices	The Required Conditions
Environment	The blower should be installed in a clean, dry and well ventilated environment. The mounting surface should be firm and flat.
Temperature	Less than 50℃
Relative Humidity	Less than 80%
Air Quality	If the air contains corrosive or flammable gases such as acid, the special customized DEREIKE ATEX models are required; To avoid the gas amounts of dust, granules or fibers. If it must be used in the above situations, please install a filter and regularly clean the filter, filter element.
Ventilation	Please choose to use the blower in a well-ventilated place. Do not use it in a closed or sealed box. If it is necessary to install it, The heat dissipation measures must be taken.
Installation Space	For routine maintenance or repair, please avoid installing it in a narrow place.
Vibration Avoid	Please install the blower in a vibration-free place. If it is to be installed in such a place, anti-vibration measures should be added to prevent it from being damaged by external vibration.

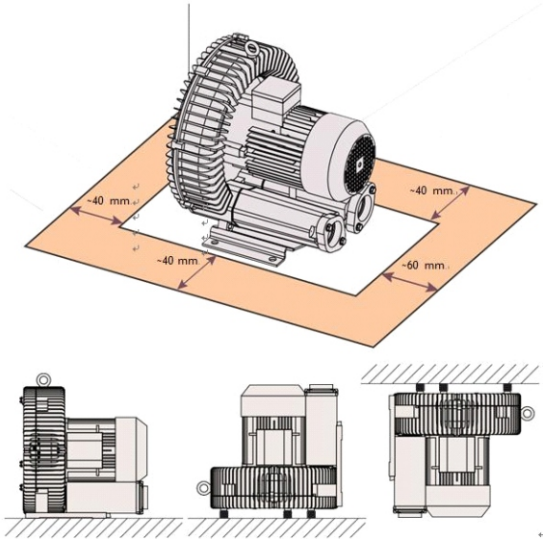

Applications

Vacuum applications： Vacuum lifting, Pneumatic conveying, Plastic machinery, Hardware cleaning, Dust removal, Photovoltaic, Glass industry, Chemical, Food package, Printing, Paper machinery, Pharmaceutical, Medical equipment and other industries;


吸附式干燥机 Adsorption Dryer


焊烟处理 Welding Fume Extraction


物料输送 Pneumatic Conveying


沼气输送 Biogas Conveying


污水处理 Sewage Treatment


水产养殖 Aquaculture


印刷设备 Printing Equipment


屠宰设备 Slaughtering Equipment

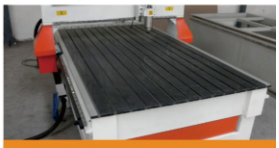
木工雕刻机 CNC Engraving Machine

Pressure applications: Air knife drying, Electronics industry, Electroplating, Biogas, Food package, Sewage treatment, Aquaculture, Spa& swimming pool, Laboratory Testing, Welding Fume Extraction, CNC Engraving Machine, Semi-Automatic, PCB, Surface Finish and the Semiconductor Industries, etc.

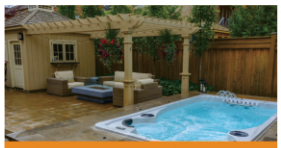
泳池/SPA Swimming/SPA Pool


电镀设备 Electroplating


中央供料 Central Feeding


纺织行业 Textile


医院/实验室检测 Hospital/Laboratory Testing


食品包装 Food Package


空气净化 Air Purification


机场地面空调设备 Airport

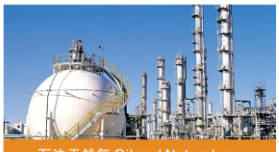
石油天然气 Oil and Natural gas

Installation Notes

1. Before installation, please confirm whether the power supply voltage matches the rated voltage of the blower, and confirm that the wiring method of the blower terminal box is consistent (refer to terminal box or the nameplate indicating the wiring method), and each wire must be confirmed to be locked. Confirm that there is no short circuit and install the ground wire correctly.

2. If the blower installed outdoors, do install a shelter above it to avoid direct rain. (DEREIKE standard model is IP54 / IP55 rated).
If must direct under rain, the blower should be special customized;

3. Please run the bower according to the steering indicated. It is not possible to reverse in long-term operation. Otherwise, the normal performance of the blower will not be achieved and the efficiency is low.

4. Check whether the fasteners of the blower are loosed before starting. The outer casing should be free from deformation or misalignment. All should be intact. Confirm that the air inlet or outlet or in the pipeline are cleaned up. Confirm the air inlet and outlet pipe is installed correctly.

5. Check if the motor cable connection is correct and the power supply voltage is normal. After all is normal, you can run the power.

6. Check the grounding of the blower casing and install the leakage protector.

7. Check if the blower is turning correctly.

Pipe Installation

1. Always disconnect the power supply before installing the pipe, and wait for the pipe installation operation after the blower is completely stopped.

2. Pipes should use durable pipes that can withstand blower pressure (vacuum) and temperature, such as iron pipes and stainless steel pipes, high temperature hoses, wire hoses, etc.

3. The pipe installation must be connected tightly to avoid leakage and create pressure (vacuum), insufficient flow.
4. When installing the pipeline, the foreign objects, dust, particles, welding slag, tools, etc. in the pipeline must be cleaned to avoid damage caused by direct suction of the blower.

5. Correct Pipe diameter should be used. Please use the same pipe as the blower inlet and outlet or one level bigger, in order to achieve the best efficiency of the blower.

6. It is forbid to full closed the pipe or severely reduced diameter of pipe when installation, if the reduce tube exceeds the original 2 / 3 of the blower, the operating temperature will raised and current will exceed the rated current, if you must use this way, you must install the pressure relief valve, in order to make blower runs normally for a long time.

7. If the blower used for positive pressure, and the temperature at the air outlet is high, and the main pipe is made of PP plastic pipe, etc. We suggest install 2m or more iron pipe before the PP plastic pipe is connected.

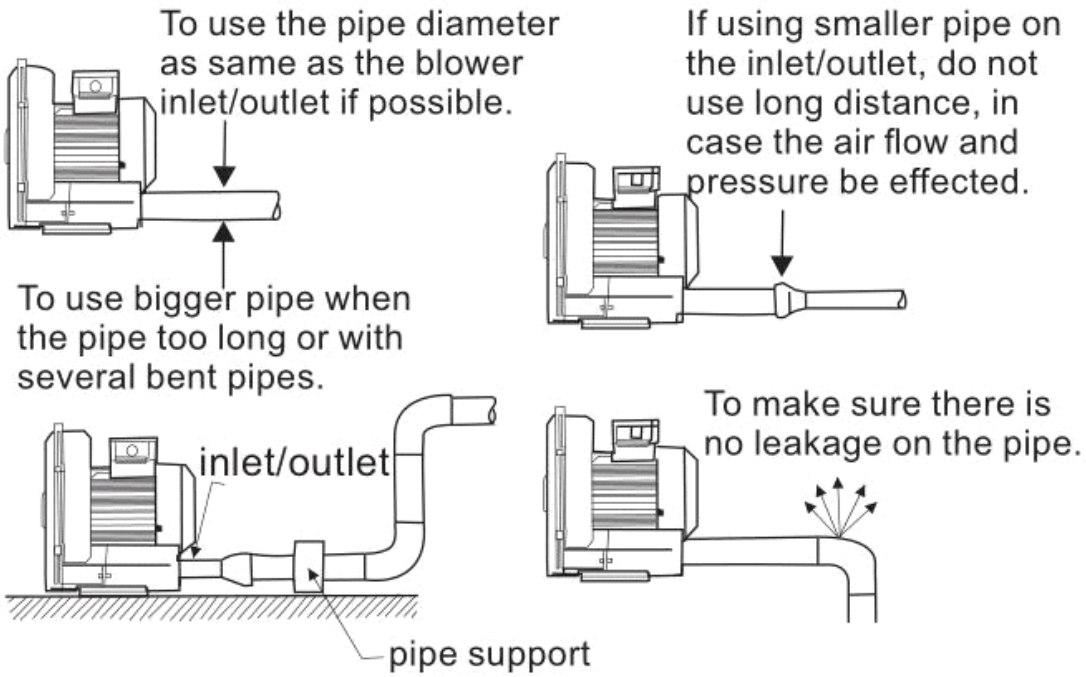

Attention: please install pipeline support where necessary in case of weight concentration

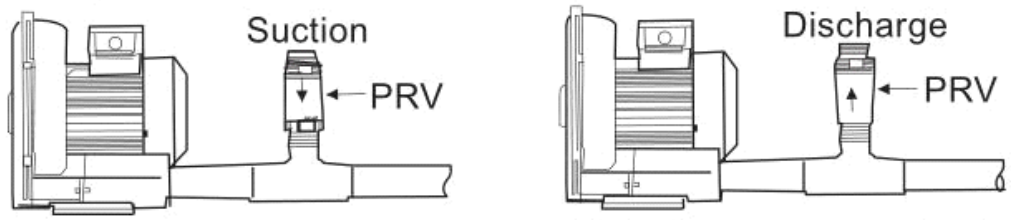

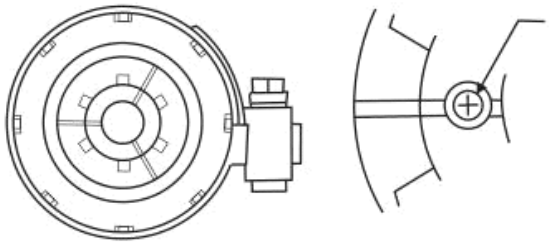

Blower Accessories Optional Selection

DAF Series Filter: Filter installed at inlet to prevent dust or foreign matter from being sucked into the blower, which might cause blower in damage. It is only used in the positive pressure of blowers and cannot be used in vacuum applications. 1. The filtration accuracy is 100mesh. 2. Using compressed air or water to directly rinse for cleaning and maintenance, the cleaning period is generally 2-20 weeks, according to actual condition. 3. The material is aluminum alloy and stainless steel mesh.



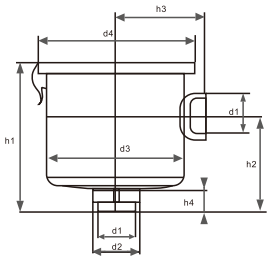

型号 Model	d1 (mm)	d2 (mm)	d3 (mm)	d4 (mm)	h1 (mm)	h2 (mm)	h3 (mm)	h4 (mm)	精度 Precision	流量 Flow m³/h	重量 Weight kg	材质 Material
DVF12	G1 1/4	48	125	145	116	68	77	16	1000	120	1.5	普通碳钢 Ordinary steel
DVF15	G1½	53	172	188	167	111	100	16	1000	150	2.3	普通碳钢 Ordinary steel
DVF20	G2	68	194	217	256	129	110	20	1000	320	4.3	普通碳钢 Ordinary steel
DVF25	G2½	86	194	217	256	129	110	13	1000	510	4.3	普通碳钢 Ordinary steel
DVF40	G4	123	268	272	263	147	194	74	1000	1000	14.5	普通碳钢 Ordinary steel

DVF Series Vacuum filter (barrel): Filters can be used either inlet or outlet to prevent dust or foreign matter from being sucked into the fan, causing damage. It can be installed in inlet for blowing (positive pressure) and suction (negative pressure). 1. The filtration accuracy is 1000 mesh. 2. Using compressed air or a brush for cleaning and maintenance, the cleaning period is generally 2-30 weeks according to the actual situation, and at least to be replaced a new one after 1 year of use. 3. The filter element is a paper filter element. It cannot absorb air or water with high humidity.



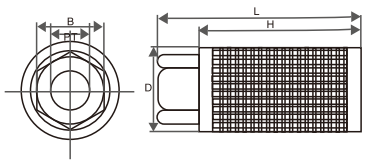

型号 Model	PT	D (mm)	L (mm)	H (mm)	B (mm)	精度 Precision	流量 Flow m³/h	重量 Weight kg	材质 Material
DAF-8	1	58	170	155	42	100	110	0.20	铝合金 Aluminium alloy
DAF-10	1 1/4	71	186	170	54	100	210	0.35	铝合金 Aluminium alloy
DAF-12	1½	85	196	182	65	100	285	0.49	铝合金 Aluminium alloy
DAF-16	2	103	215	202	75	100	395	0.56	铝合金 Aluminium alloy
DAF-20	2½	148	274	252	97	100	750	1.20	铝合金 Aluminium alloy
DAF-32	4	208	380	357	142	100	1000	2.45	铝合金 Aluminium alloy

DM Series muffler: It is used for low noise requirements conditions. The muffler can only reduce the noise of about 5-10db. One muffler for one blower, and even multiple installations in series can only reduce 5db. The silencer can be installed at any direction.



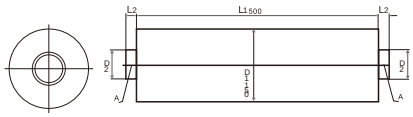

型号 Model	A	D2 (mm)	L2 (mm)	消音 Muffler	材质 Material
DM-12	G1 1/4	40	17	5db	普通碳钢 Ordinary steel
DM-15	G1½	48	19	5db	普通碳钢 Ordinary steel
DM-20	G2	62	21	5db	普通碳钢 Ordinary steel
DM-25	G2½	78	24	5db	普通碳钢 Ordinary steel
DM-40	G4	125	40	5db	普通碳钢 Ordinary steel

PRV Series Pressure relief valve: it mainly regulates the pressure of the blower, and protects blower from overloaded. The relief valve is installed on the outlet or the inlet pipe. The pressure relief valve discharges the excess pressure through the release air volume or Inhalation by T connector.



All the above accessories and connectors is optional according to customer's requirement. Please contacts the sales engineer for more technic and installation details;

Blower Electric connections

Important! Make sure all wires are tightened down on the terminals, and blower is properly grounded. Make sure to use a circuit breaker protection according to the size of the blower. Make sure rotation is correct and air flowing in the direction of the arrow on the side of the blower. Do not block air flow, refer to performance curve for Minimum air flow requirements.

Models: DHB XXX A XXX (220V 1 Phase)



Models: DBH XXX B XXX (220V-480V 3 Phase)
DHBT XXX B XXX (220V-480V 3 Phase)

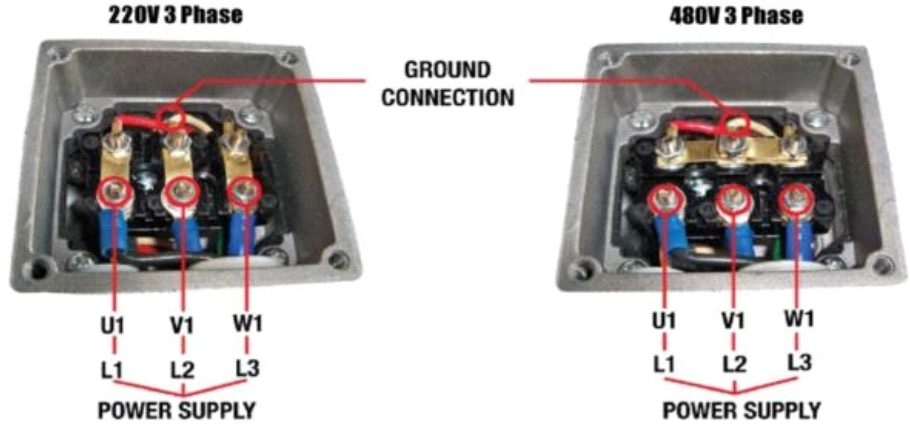

Models: DHB XXX C XXX (480V-720V 3 Phase)
DHBT XXX C XXX (480V-720V 3 Phase)



Delta connection (low voltage)

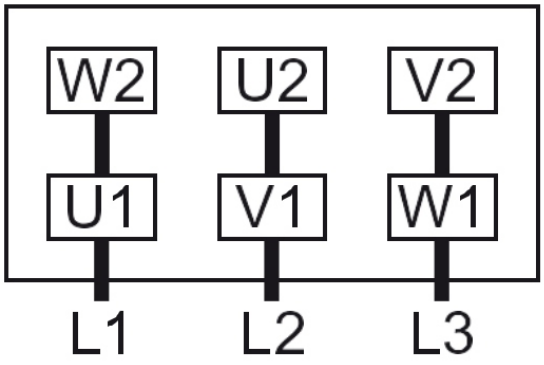

Star connection (high voltage):

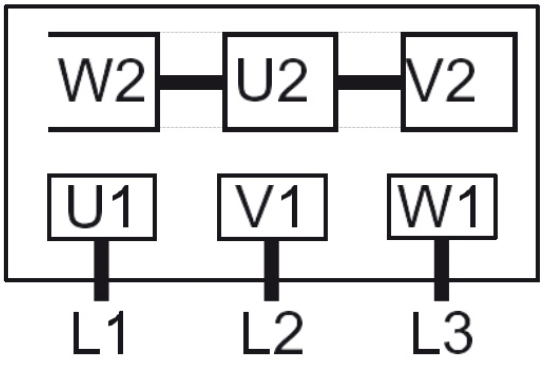

If you voltage is different from the blower nameplate voltage, do contact the DEREIKE sales engineer to make sure before wire connection and powered.

Other Notes

1. The blower will generate high temperature during operating.
No contact with the outer casing to avoid burns. The blower casing temperature and outlet temperature are inconsistent due to different blower models, power and loading.
Generally, it is normal even the temperature reaches 60-100 °C.

2. The motor load current will change with the pressure of the blower. The wiring should be used with the overload protection switch and used under the rated full load current (A) to avoid the motor be burned (The rated full load current refer to the nameplate on the blower).

3. For the operating range of the blower, please refer to the graph on the catalogue and use it within the curve range, but if it is close to high pressure, do not exceed the scope of use.

4. When the air flow rate is close to the complete closed state, the temperature will rise sharply. Therefore, special attention should be paid to this condition. If the temperature rises, do not place the blower in a sealed room.

5. The hard objects, dust, powder particles, fibers and water droplets should be removed before the air enters the blower, it can be treated by filters, etc. If the filter is installed in the pipeline device, please use a large area filter to avoid the loss of the pressure. And to avoid hold back of pressure, regular cleaning of filter is required.

6. The bearings, oil seals and inlet/outlet muffler are consumables, inherently a certain life, need to be replaced regularly. At the same time, the impeller, outer casing and metal mesh may be replaced regularly according to the application environment, and the blower casing should be kept clean.

Repair & Maintenance

1. Repair or maintenance of blower must be carried out by full-time maintenance personnel or sent back to the factory for maintenance.

2. If there is an abnormal phenomenon in the operation, such as noise screaming, vibration is increased, and the temperature is abnormally increased, the power should be disconnected for inspection immediately, and then power-on after being repaired.

3. The filter of the inlet and outlet of the blower should be kept clean frequently to avoid the blockage affecting the normal operation.

4. Change the bearing regularly. When replacing the bearing, the bearing specification model and bearing grease should be the same as the original product.

5. It is recommended to replace the front axle oil seal, and the rear axle oil seal when replacing the bearing, the grease should be applied during installation to avoid the friction sound of the new oil seal.

6. Others: The silencer cotton, silencer iron mesh, gaskets, wiring terminals, etc., need to be cleaned or replaced depending on the situation.

A-Noise		
Code	Source of Cause	Cause
A1	Impeller impact Inlet or outlet or pump body	1. The impeller collides with foreign objects, causing eccentricity and impeller imbalance. 2. The inlet and outlet parts or the pump body are damaged. 3. The impeller is damaged or worn. 4. Bearing damaged. 5. The bearing and the rotor or the bearing housing is worn and loose. 6. The rotor is deformed or damaged. 7. The rotor or bearing is displacement.
A2	The wind speed is too fast and there is a sharp noise	1. The inlet and outlet pipe are too small. 2. The cross-sectional area of the application terminal is too small. 3. The radius of elbow in pipe is too small. 4. The blower pipe system has a sudden shrinkage or rapid expansion 5. The built-in silencer is not installed
A3	Leakage of air	1. There is a hole or crack in the pump body or pump cover. 2. The system pipeline has a leak. 3. The blower inlet and outlet joints have leaks.
A4	Heavy vibration	1. The fan is not fixed. 2. The fan pipe is not fixed. 3. Anti-vibration rubber pad is not installed.

B-Insufficientairflow		
Code	Source of Cause	Cause
B1	The pump	1. The blower speed is too low (voltage is too low, frequency is too low); 2. The impeller and the pump body are blocked by foreign matter; 3. Blower component installation error (impeller, pump body, pump cover); 4. The inlet and outlet fittings are not suitable (the valves, pressure relief valves, etc. are too small); 5. The built-in silencer seal damaged; 6. The axial seal of the blower is damaged, resulting in air leakage; 7.The wrong direction of operation;
B2	Pipe system	1. The actual pressure loss is higher than the estimated value; 2. There's a leak on the side of the pipe; 3. There is a leak at the pipe joint (it is also possible in the built-in silencer or flange); 4. The inlet and outlet pipes are blocked;
B3	Filter system	1. Filter blocked; 2. The filter selection is wrong, the filter area is insufficient;
B4	Obstruction at inlet	1. The air inlet is blocked by foreign matter; 2. The blower inlet pipe shrinkage is serious;

C-Insufficientpressureorvacuum		
Code	**Source of Cause**	**Cause**
C1	The blower itself	1. The impeller or the inlet is blocked; 2. After the fan is disassembled, the impeller is installed incorrectly; 3. The motor coil aging, coil damaged; 4. The blower operating speed is too low;
C2	The system	1. The application system resistance loss is too large; 2. The control valve is not opened or damaged; 3. The valve diameter is too small;
C3	Gas density	1. Inlet air temperature is too high; 2. Application in high altitude areas;

Remarks: Due to the lack of proper equipment at the engineering site, and the measuring instrument, the piping method is different from the DEREIKE test, the measured value on site can't completely consistent with the DERIEKE data. Also pay attention to the impact of air density, wind speed, atmospheric pressure, temperature, etc. on the system.

D-Theblowerisnotrunning		
Code	**Source of Cause**	**Cause**
D1	The motor or circuit	1. The power line or switch lacks phase power transmission, motor operating with phase loss; 2. The power supply voltage does not match the voltage of the blower; 3 The overload protector open circuit to protection; 4. The voltage is insufficient, or the power line is too long, the voltage drop is too large; 5. The motor heat dissipation is poor, the ambient temperature is too high, the motor burnt;
D2	Machinery	1. The impeller is damaged, causing the blower locked up. 2. The bearing is damaged, the motor can not start;

E–Thecurrentistoolarge		
Code	**Source of Cause**	**Cause**
E1	System	1. The piping is too small; 2. The system resistance loss is too large; 3. The blower inlet and outlet are completely closed; 4. The pipeline valve is not open (ball valve, check valve, etc.);
E2	The blower	1. Working speed is too fast; 2. The bower working point is not rated;
E3	Gas density	1. Application where the air density is low, below the standard atmospheric pressure value;
E4	Blower model selection	1. The blower model selection is wrong, which is based on the maximum working pressure, not the working point parameter; 2. When selection does not consider the pipe resistance loss, and the 10% spare parameter;
E5	Measurement error	1. The vacuum gauge or pressure gauge selected wrongly; 2. Measurement current meter selected wrongly;

F-Blowerinhightemperature		
Code	**Source of Cause**	**Cause**
F1	System and environment	1. The Inlet air temperature or ambient temperature is too high; 2. The blower is overloaded, exceed the rated current; 3. The installation space is too small, poor heat dissipation;
F2	The motor	1. The running frequency is too low; 2. The motor phase loss ; 3. The motor starts too frequently;

G-Blowervibration		
Code	Source of Cause	Cause
G1	The impeller, rotor imbalance	1. Impeller has foreign matter; 2. Impeller wear, corrosion, foreign object impacted; 3. The balance tab dropped; 4. The wear of oil ; 5. The rotor displaced;
G2	The blower loosened	1. Impeller fixing screw is loosed; 2. The fan installation base screw is loosed; 3. The motor back cover screw is loosed; 4. The pump body screw is loosed;
G3	The motor and external influences	1. The blower and the mounting base are not properly fixed. 2. The blower inlet and outlet pipes are not properly connected. 3. The motor phase imbalance; 4. The single-phase motor capacitor damaged;
G4	The air flow	1. The blower is overloaded or full loaded; 2. Influence of system vibration or high voltage source on the blower;

H-FrequencyConverter		
Code	Source of Cause	Cause
H1	Unable to start or jump protection	1. Parameter setting, the acceleration time is too short; 2. The parameter setting error (Please contact the inverter company or refer to the inverter instruction manual for the above questions)

After-sales service

We stand behind our products 100%. Should there ever be any cause for complaint, we ask you to follow this procedure.

The clear description of the problem and pictures need be provided by customer; Such as the blower label, the defects parts, and if possible the working site pictures and video.

Then we will feedback the information to our engineer to find a diagnosis to the problem. If it is proofed a quality problem of blower itself, and the problem can be fixed by customer, then we will send the repair instruction and news parts to customer for repair free charges; if can't, we would sending a new blower to replaced free of charges.

If the problem was caused by customers' improper usage, we will also send instruction and new parts to repair but with charges;

After-sales service

Within 6 months, send a free brand-new blower while ocean freight/express courier is on DEREIKE's account;

Within 12 months, send a free brand-new blower while ocean freight/express courier is on customer's account;

Within 24months, send repair instruction via email after the diagnosis of problem. Send free accessories while freight/express courier is on customer's account;

The natural disasters, misuse, unauthorized disassembly, beyond the scope of product work, transport damage, improper installation, foreign object impact, etc. are not covered by the warranty.

The final interpretation right of this instruction manual and the warranty regulations belongs to the DEREIKE. It is not allowed to carry out the printing and communication. We will pursue legal responsibility

DEREIKE SIDE CHANNEL BLOWER

Service Hotline：0769-26880032
Official Website：www.dereike.com
The company has the final interpretation of the above instructions