# DHBT Series

# DHBT 310E D94

Technical datasheet

## Dereike blower performance curves

### Vacuum selection diagram curve

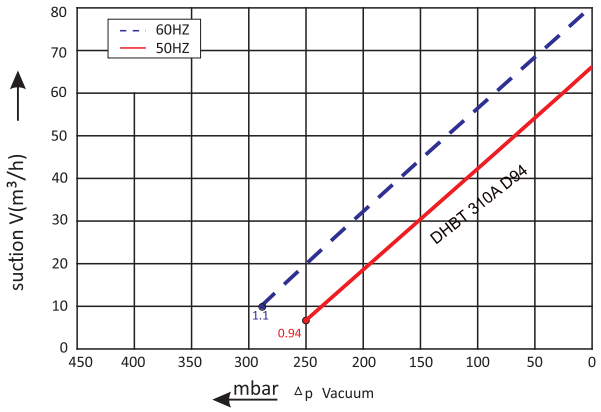


### Compressor selection diagram curve

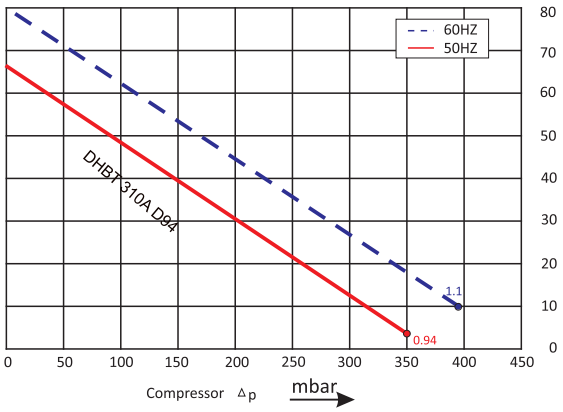


## Dereike blower installation drawing

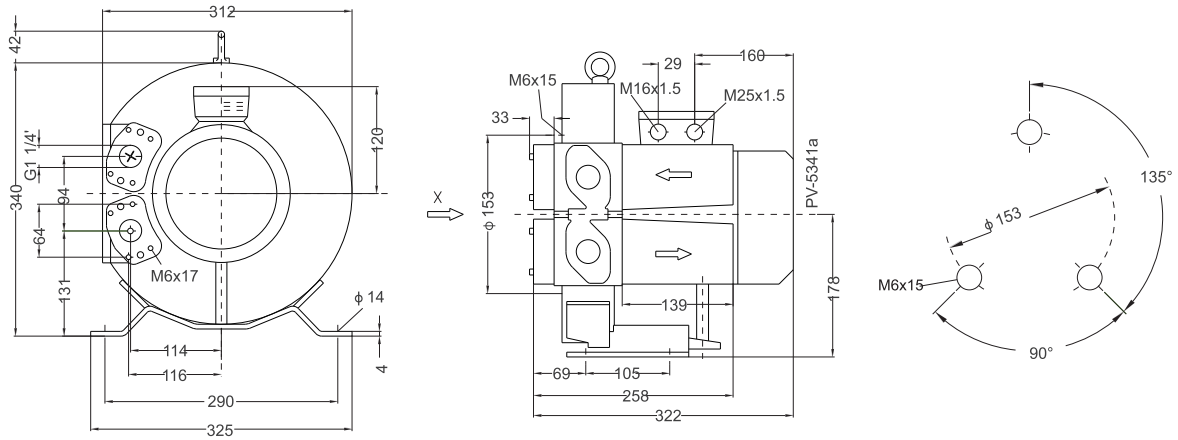


## Dereike blower installation parameter

| Model | Frequency | Output | Voltage | Current | Airflow | Pressure | | Noise | Weight |
|---|---|---|---|---|---|---|---|---|---|
| | HZ | KW | V | A | m³/h | vacuum mbar | compressor mbar | dB(A) | |
| DHBT 310E D94 | 50 | 0.94 | 115/230 | 15.2/7.6 | 66 | -250 | 350 | 57 | 18 |
| | 60 | 1.1 | 115/230 | 2.0 | 80 | -280 | 390 | 62 | 18 |

The performance curves of Dereike blower is tested through below ways:

Under one atmospheric pressure, suck 15℃ air and then you can calculate the data, of course allow 10% difference, and when the sucked air and surroundings temperature are not higher than 25℃, you still can get total pressure difference as the curves shows.


Dongguan Dereike Intelligent M and E Equipment Co., Ltd

Address: Building 2, CaiBai Street 3, CaiBai Village, Daojiao Town,Dongguan City, 523170, China.

Mobile/Whatsapp/Wechat: 0086 13826960346 Email: info@dereike.com Website: http://www.dereike.com