3NB Series

DHB 550-3AAT67-011

Technical datasheet

Dereike blower performance curves

Vacuum selection diagram curve

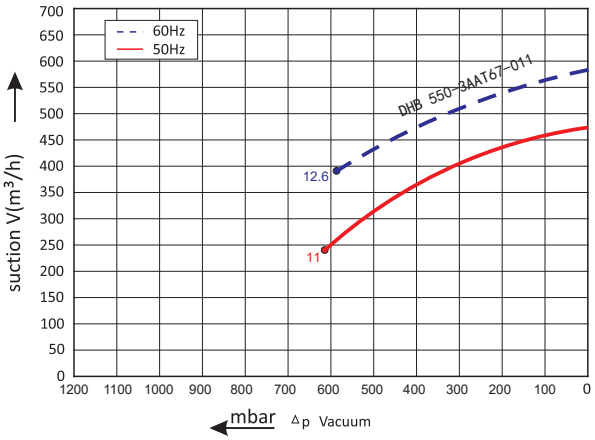

Compressor selection diagram curve

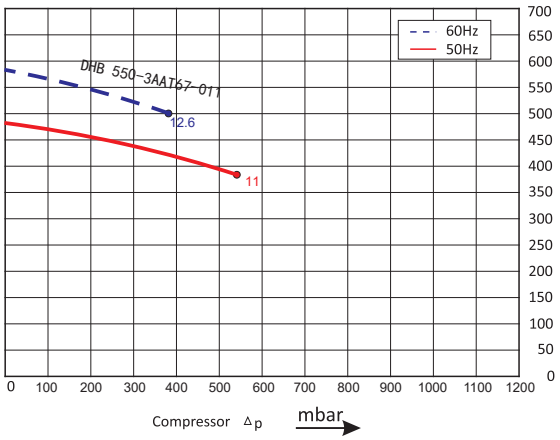

Dereike blower installation drawing (mm)

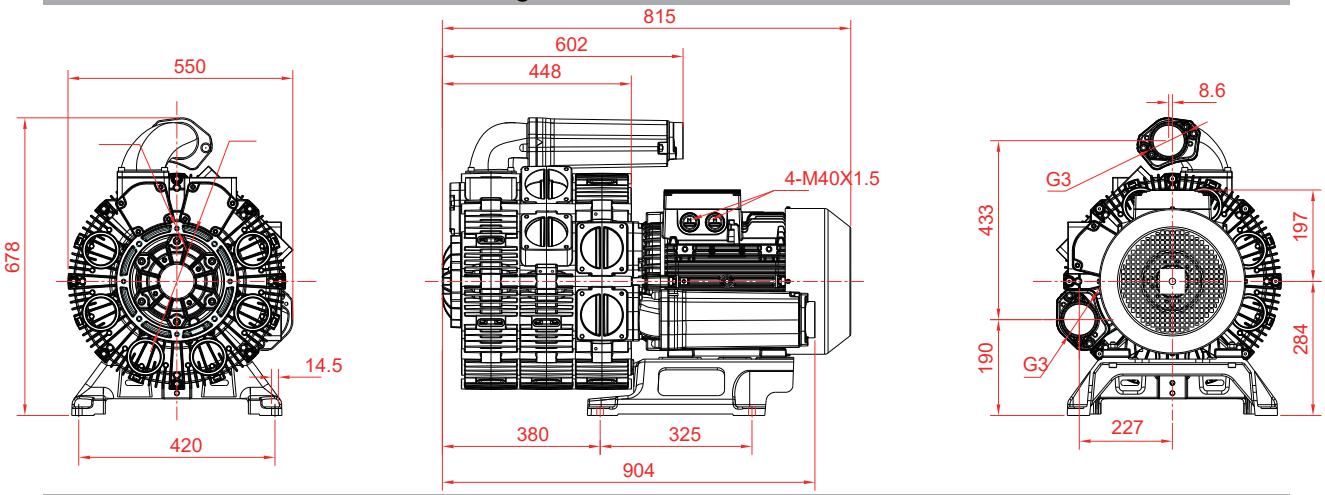

Dereike blower installation parameter

Model	Frequency	Output	Voltage	Current	Airflow	Pressure		Noise	Weight
	HZ	KW	V	A	m³/h	vacuum mbar	compressor mbar	dB(A)	
DHB 550-3AAT67-011	50 60	18.5 21.3	350-450Δ/610-725Y 400-500Δ/690-725Y	22.0Δ/12.7Y 22.0Δ/12.9Y	480 580	-610 -590	540 390	71 77	167

The performance curves of Dereike blower is tested through below ways:

Under one atmospheric pressure, suck 15℃ air and then you can calculate the data, of course allow 10% difference, and when the sucked air and surroundings temperature are not higher than 25℃, you still can get total pressure difference as the curves shows.

Dongguan Dereike Intelligent M and E Equipment Co., Ltd
Address: Building 2, CaiBai Street 3, CaiBai Village, Daojiao Town,Dongguan City, 523170, China.
Mobile/Whatsapp/Wechat: 0086 13826960346 Email: info@dereike.com Website: http://www.dereike.com